12V (RE lead-acid battery) High State-of-Charge Detector

2007/09/04

Revision: 1

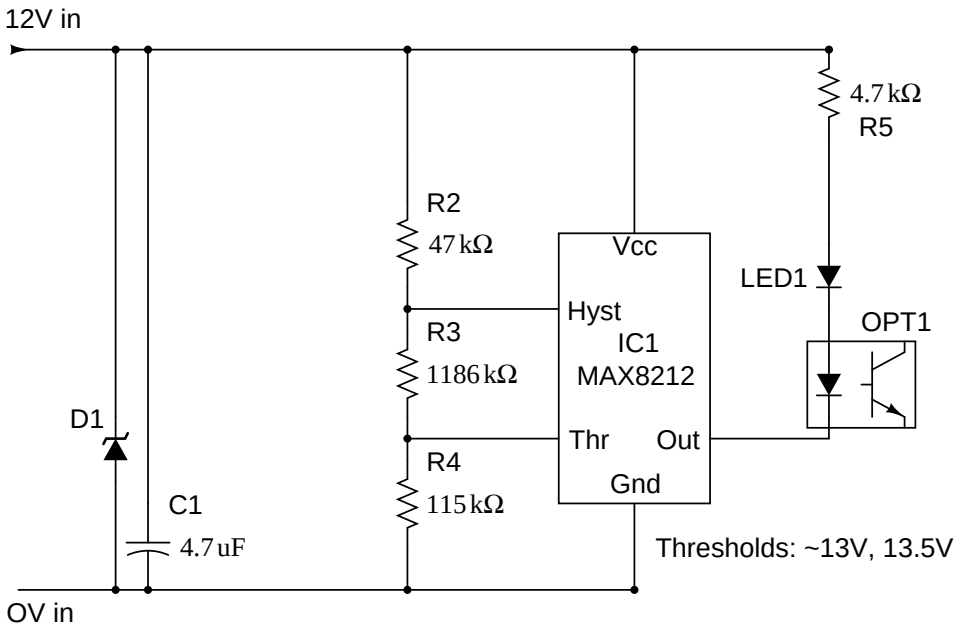

D1: transient suppressor diode, 16V, 27A, 600W
R2, R3: 1% or better
R4: 0.1%

Note 1: In this version, mains power to the laptop mains power adaptor is never removed, resulting in ~7W minimum standby power draw.
Note 2: The opto-isolator outputs drive monitoring digital inputs to the laptop; the LEDs provide visual indication of same.