12V (RE lead-acid battery) Laptop Battery Supply w/ Mains Fallback

2007/08/08
Revision: 3

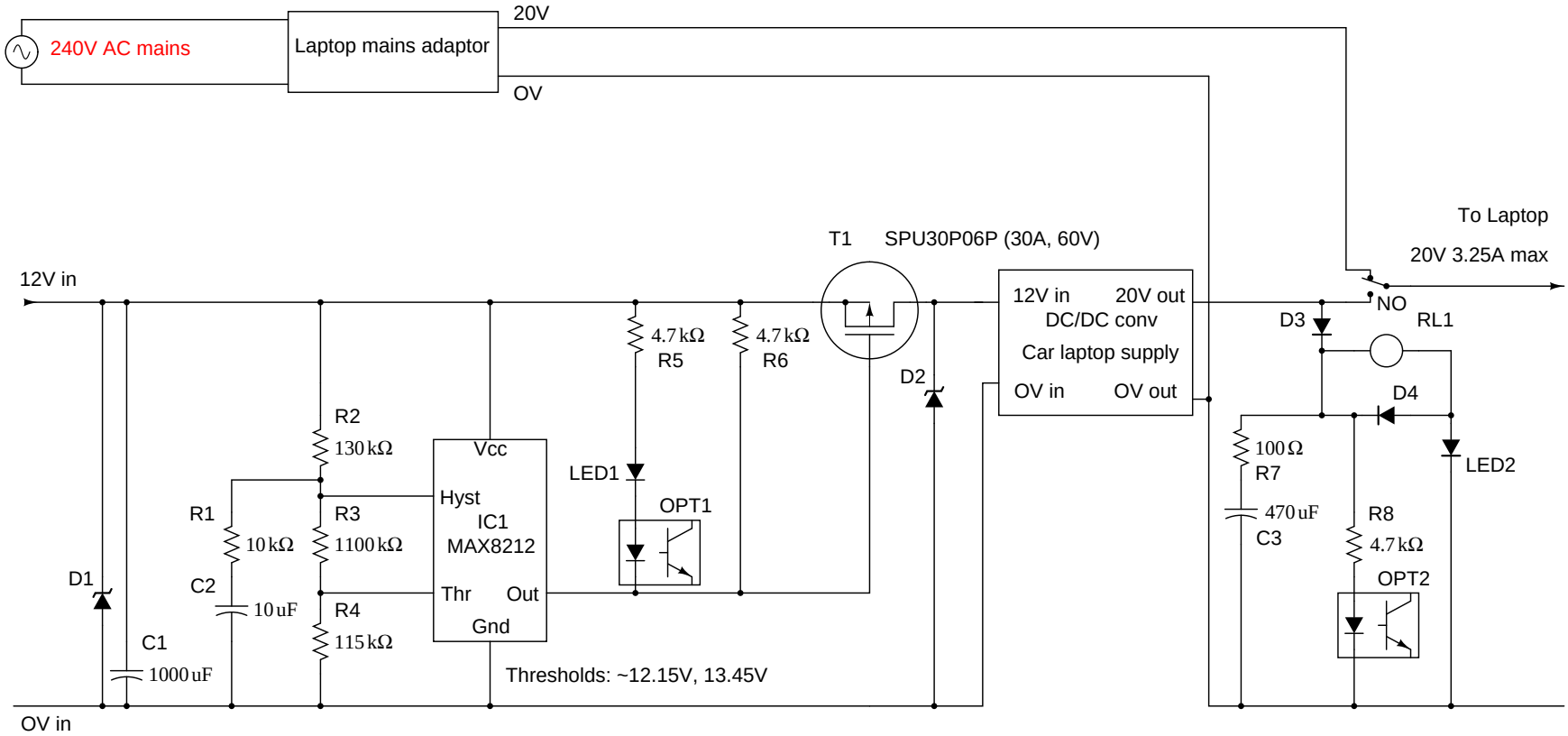

D1, D2: transient suppressor diodes, 16V, 27A, 600W
D3, D4: IN4001
RL1: 24V >1k coil (<20V pull-in), 8A DC contacts
R2, R3: 1% or better
R4: 0.1%

Note 1: In this version, mains power to the laptop mains power adaptor is never removed, resulting in ~7W minimum standby power draw.
Note 2: The opto-isolator outputs drive monitoring digital inputs to the laptop; the LEDs provide visual indication of same.